

2025

SLIM SHAKER SPEC BOOK

www.thailandcabinetry.com/

EDITION

2025

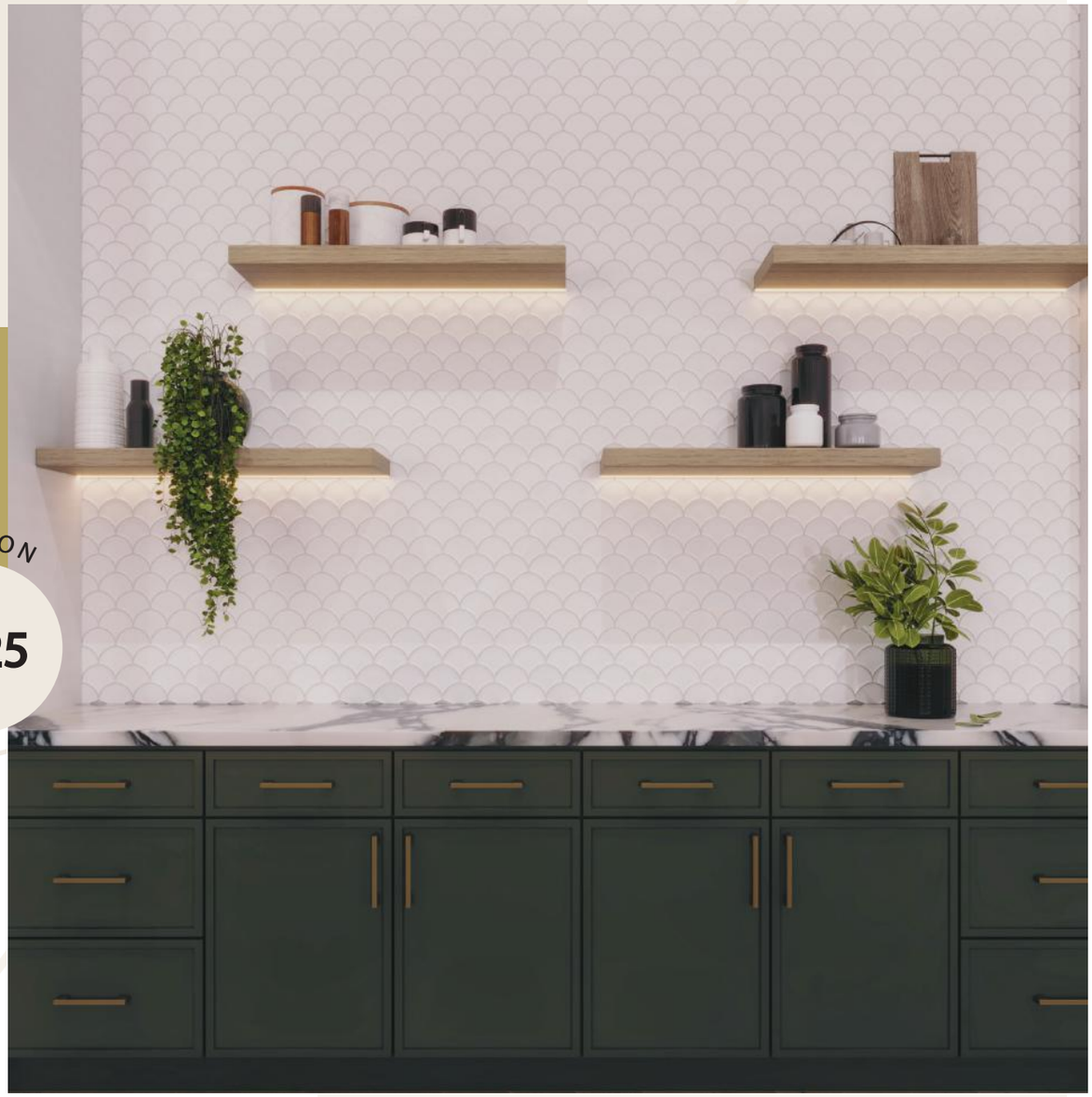

www.thailandcabinetry.com

Table of Content

04 Slim Shaker Collection

05 Cabinet Construction Slim Shaker

06 Cabinet Construction Universal

07 How to Order

08 Wall Cabinet Diagram

18 Base Cabinet Diagram

25 Tall Cabinet Diagram

28 Vanity Cabinet Diagram

32 Accesories & Molding Diagram

40 Warranty

Slim Shaker

COLLECTION



Model Name:

SWO -
Slim White Oak



Model Name:

SDW -
Slim Dove White



NEW

Model Name:

SAG -
Slim Aston Green

Cabinet Construction Slim Shaker

- Slim White Oak (SWO)
- Slim Dove White (SDW)



05 Full overlay five-piece doors and drawer fronts.

06 6 way stainless-steel adjustable door hinges and door bumpers included.

07 Solid Wood painted face frame.

01 

Solid wood drawer box with dovetail construction.

02 

Soft close, undermounted full extension drawer slides.

03 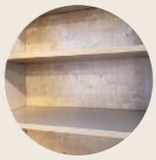

UV-coated natural interiors.

04 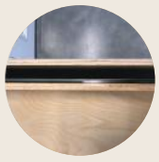

1/2" plywood boxes with finished exteriors.

A	Door & Drawer Front: Full overlay, 5-pieces door & drawer, solid wood with MDF center panel.
B	Face Frame: 3/4" solid wood frame
C	Cabinet Box: 1/2" cabinet grade plywood box.
D	Drawer Box: Solid wood, dovertail construction, 3 1/8 depth
E	Drawer Glides: Concealed undermount full extension glides with soft-close feature.
F	Hinges: 6-way adjustable with soft-close feature
G	Exterior Finish: Matching color exterior.
H	Interior Finish: Clear UV coated natural plywood.
I	Shelves: 3/4" thick plywood with front edge banding.
J	Accessories: Door bumper, metal shelf pin, metal clips, L bracket for base cabinet.
K	Package: One box per cabinet.
L	Certification: TSCA VI, KCMA, CARB2, NGBS Green.

EDITION 2025

Cabinet Construction Universal Box

- Slim Aston Green (SAG)



05 Shelf 3/4" thick plywood with front edge banding.

06 Full overlay, 5-pieces door & drawer, solid wood with MDF center panel.

07 6-way adjustable with soft-close feature

08 3/4" solid wood frame.

01  Solid wood, dovetail constrution, 3 1/8" depth.

02  Concealed undermount full extensions glides with soft-close feature.

03  Interior and Exterior: Clear UV coated natural plywood.

04  1/2" cabint grade plywood box.

A	Door & Drawer Front: Full overlay, 5-pieces door & drawer, solid wood with MDF center panel.
B	Face Frame: 3/4" solid wood frame
C	Cabinet Box: 1/2" cabinet grade plywood box.
D	Drawer Box: Solid wood, dovertail construction, 3 1/8" depth
E	Drawer Glides: Concealed undermount full extension glides with soft-close feature.
F	Hinges: 6-way adjustable with soft-close feature
G	Exterior Finish: Clear UV coated natural plywood. Need to add BSV, WSV, USV for the expose part.
H	Interior and Exterior Finish: Clear UV coated natural
I	Shelves: 3/4" thick plywood with front edge banding.
J	Accessories: Door bumper, metal shelf pin, metal clips, L bracket for base cabinet.
K	Package: 2 packages, universal box & front set.
L	Certification: TSCA VI, KCMA, CARB2, NGBS Green.

How To Order

To Order:
Specify the 3-letter door style, followed by the product number for the cabinet.

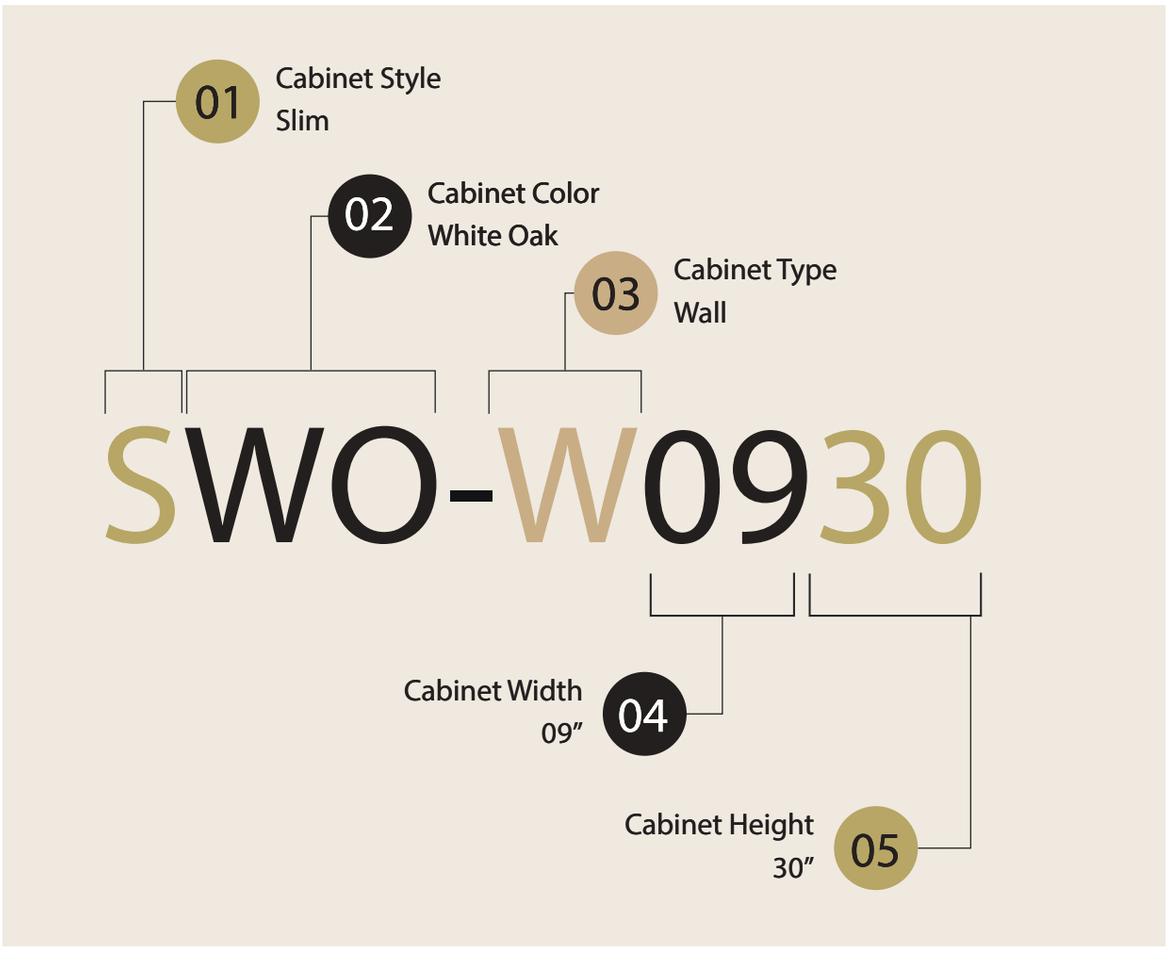

Example Below:
SWO-W0930 would be the product number used to order a Shaker White Oak (SWO) Wall Cabinet, 09” wide, 30” high.

EDITION
2025

Wall Cabinets Diagram

Explore all our SKUs and sizes to find the perfect fit for your needs.

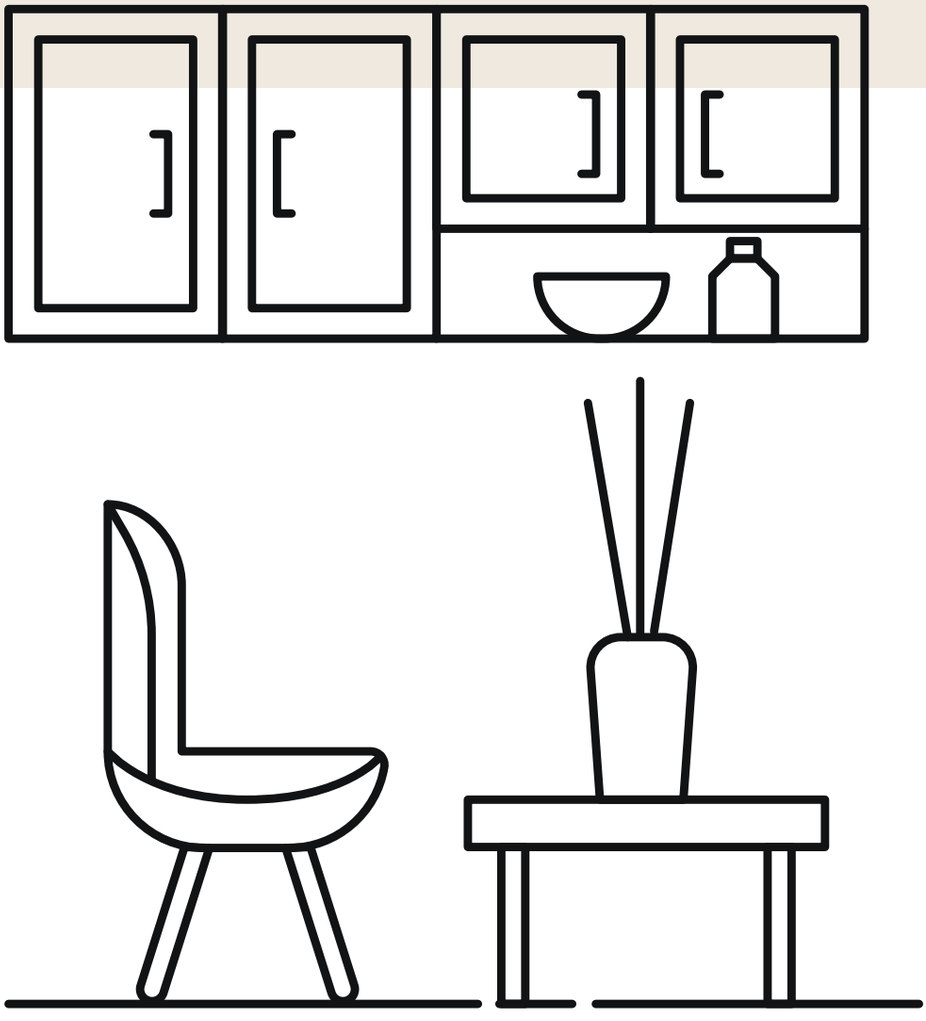

Wall Cabinet Single Glass Door

Item Code		W	H	D
W1212GD	Cabinet	12	12	12
	Door	11 1/2	11 3/4	3/4
W1215GD	Cabinet	12	15	12
	Door	11 1/2	14 3/4	3/4
W1218GD	Cabinet	12	18	12
	Door	11 1/2	17 3/4	3/4
W1512GD	Cabinet	15	12	12
	Door	14 1/2	11 3/4	3/4
W1515GD	Cabinet	15	15	12
	Door	14 1/2	14 3/4	3/4
W1518GD	Cabinet	15	18	12
	Door	14 1/2	17 3/4	3/4
W1812GD	Cabinet	18	12	12
	Door	17 1/2	11 3/4	3/4
W1815GD	Cabinet	18	15	12
	Door	17 1/2	14 3/4	3/4
W1818GD	Cabinet	18	18	12
	Door	17 1/2	17 3/4	3/4
W2112GD	Cabinet	21	12	12
	Door	20 1/2	11 3/4	3/4
W2115GD	Cabinet	21	15	12
	Door	20 1/2	14 3/4	3/4
W2118GD	Cabinet	21	18	12
	Door	20 1/2	17 3/4	3/4

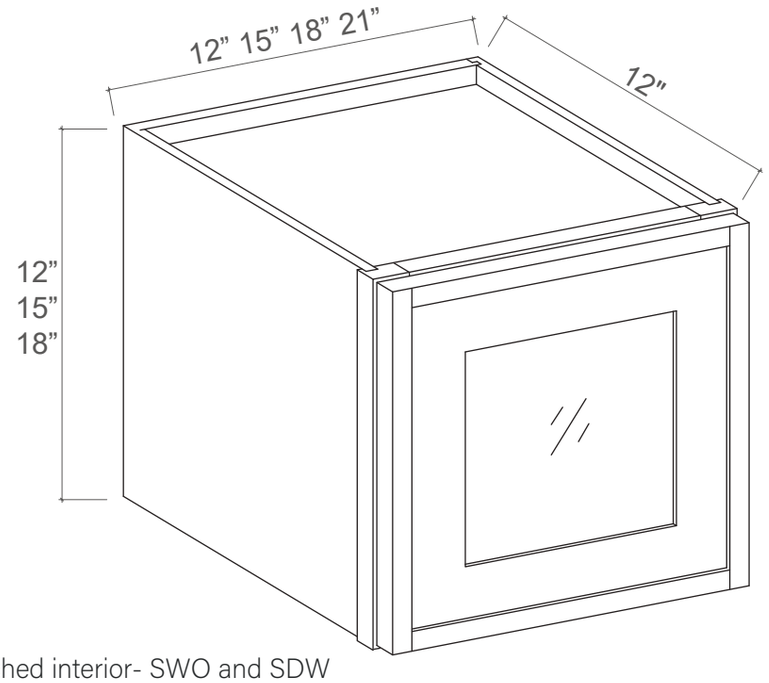

Clear glass & color matched interior- SWO and SDW
Frosted glass & natural interior - SAG

Wall Cabinet Double Glass Doors

Item Code		W	H	D
W2412GD	Cabinet	24	12	12
	Door	11 3/4	11 3/4	3/4
W2415GD	Cabinet	24	15	12
	Door	11 3/4	14 3/4	3/4
W2418GD	Cabinet	24	18	12
	Door	11 3/4	17 3/4	3/4
W2712GD	Cabinet	27	12	12
	Door	13 1/4	11 3/4	3/4
W2715GD	Cabinet	27	15	12
	Door	13 1/4	14 3/4	3/4
W2718GD	Cabinet	27	18	12
	Door	13 1/4	17 3/4	3/4
W3012GD	Cabinet	30	12	12
	Door	14 3/4	11 3/4	3/4
W3015GD	Cabinet	30	15	12
	Door	14 3/4	14 3/4	3/4
W3018GD	Cabinet	30	18	12
	Door	14 3/4	17 3/4	3/4
W3312GD	Cabinet	33	12	12
	Door	16 1/4	11 3/4	3/4
W3315GD	Cabinet	33	15	12
	Door	16 1/4	14 3/4	3/4
W3318GD	Cabinet	33	18	12
	Door	16 1/4	17 3/4	3/4
W3612GD	Cabinet	36	12	12
	Door	17 3/4	11 3/4	3/4
W3615GD	Cabinet	36	15	12
	Door	17 3/4	14 3/4	3/4
W3618GD	Cabinet	36	18	12
	Door	17 3/4	17 3/4	3/4

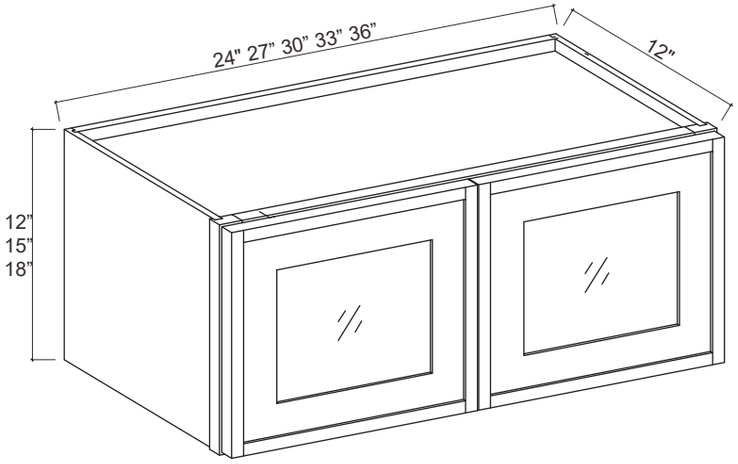

Clear glass & color matched interior- SWO and SDW

Frosted glass & natural interior - SAG

Easy Reach Wall Glass Door Cabinet

Item Code		W	H	D
WER2412GD	Cabinet	24	12	12
	Door	10 3/4	11 3/4	3/4
WER2415GD	Cabinet	24	15	12
	Door	10 3/4	14 3/4	3/4
WER2418GD	Cabinet	24	18	12
	Door	10 3/4	17 3/4	3/4

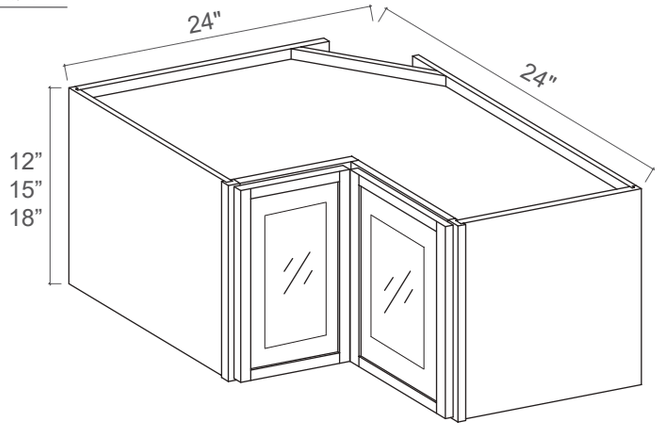

Clear glass & color matched interior- SWO and SDW

Frosted glass & natural interior - SAG

No Shelf

Wall Diagonal Glass Door Corner Cabinet

Item Code		W	H	D
DCW2412GD	Cabinet	24	12	12
	Door	15 1/4	11 3/4	3/4
DCW2415GD	Cabinet	24	15	12
	Door	15 1/4	14 3/4	3/4
DCW2418GD	Cabinet	24	18	12
	Door	15 1/4	17 3/4	3/4

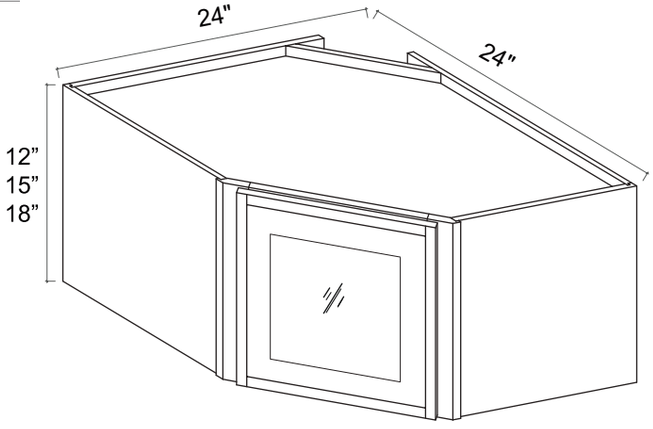

Clear glass & color matched interior- SWO and SDW

Frosted glass & natural interior - SAG

No Shelf

Wall Cabinet Double Doors

Item Code		W	H	D
W2418	Cabinet	24	18	12
	Door	11 3/4	17 3/4	3/4
W3012	Cabinet	30	12	12
	Door	14 3/4	11 3/4	3/4
W3015	Cabinet	30	15	12
	Door	14 3/4	14 3/4	3/4
W3018	Cabinet	30	18	12
	Door	14 3/4	17 3/4	3/4
W3024	Cabinet	30	24	12
	Door	14 3/4	23 3/4	3/4
W3312	Cabinet	33	12	12
	Door	16 1/4	11 3/4	3/4
W3315	Cabinet	33	15	12
	Door	16 1/4	14 3/4	3/4
W3318	Cabinet	33	18	12
	Door	16 1/4	17 3/4	3/4
W3324	Cabinet	33	24	12
	Door	16 1/4	23 3/4	3/4
W3612	Cabinet	36	12	12
	Door	17 3/4	11 3/4	3/4
W3615	Cabinet	36	15	12
	Door	17 3/4	14 3/4	3/4
W3618	Cabinet	36	18	12
	Door	17 3/4	17 3/4	3/4
W3624	Cabinet	36	24	12
	Door	17 3/4	23 3/4	3/4

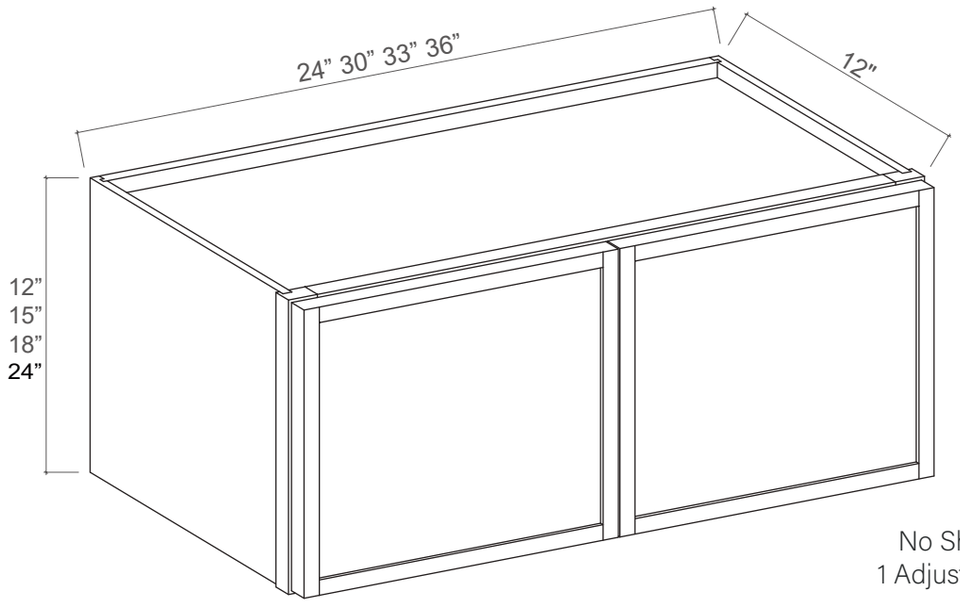

No Shelf (12”, 15”, 18”)
1 Adjustable Shelf (24”)

Wall Cabinet Single Door

Item Code		W	H	D
W0930	Cabinet	9	30	12
	Door	8 3/4	29 3/4	3/4
W0936	Cabinet	9	36	12
	Door	8 3/4	35 3/4	3/4
W0942	Cabinet	9	42	12
	Door	8 3/4	41 3/4	3/4
W1230	Cabinet	12	30	12
	Door	11 3/4	29 3/4	3/4
W1236	Cabinet	12	36	12
	Door	11 3/4	35 3/4	3/4
W1242	Cabinet	12	42	12
	Door	11 3/4	41 3/4	3/4
W1530	Cabinet	15	30	12
	Door	14 3/4	29 3/4	3/4
W1536	Cabinet	15	36	12
	Door	14 3/4	35 3/4	3/4
W1542	Cabinet	15	42	12
	Door	14 3/4	41 3/4	3/4
W1830	Cabinet	18	30	12
	Door	17 3/4	29 3/4	3/4
W1836	Cabinet	18	36	12
	Door	17 3/4	35 3/4	3/4
W1842	Cabinet	18	42	12
	Door	17 3/4	41 3/4	3/4
W2130	Cabinet	21	30	12
	Door	20 3/4	29 3/4	3/4
W2136	Cabinet	21	36	12
	Door	20 3/4	35 3/4	3/4
W2142	Cabinet	21	42	12
	Door	20 3/4	41 3/4	3/4

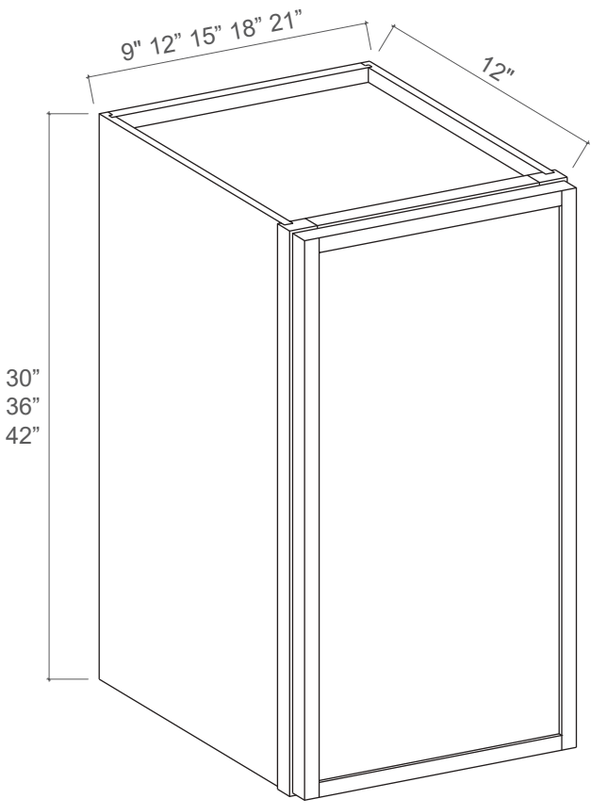

2 Adjustable Shelves (30" & 36")
3 Adjustable Shelves (42")

Wall Cabinet Double Door

Item Code		W	H	D
W2430	Cabinet	24	30	12
	Door	11 3/4	29 3/4	3/4
W2436	Cabinet	24	36	12
	Door	11 3/4	35 3/4	3/4
W2442	Cabinet	24	42	12
	Door	11 3/4	41 3/4	3/4
W2730	Cabinet	27	30	12
	Door	13 1/4	29 3/4	3/4
W2736	Cabinet	27	36	12
	Door	13 1/4	35 3/4	3/4
W2742	Cabinet	27	42	12
	Door	13 1/4	41 3/4	3/4
W3030	Cabinet	30	30	12
	Door	14 3/4	29 3/4	3/4
W3036	Cabinet	30	36	12
	Door	14 3/4	35 3/4	3/4
W3042	Cabinet	30	42	12
	Door	14 3/4	41 3/4	3/4
W3330	Cabinet	33	30	12
	Door	16 1/4	29 3/4	3/4
W3336	Cabinet	18	36	12
	Door	16 1/4	35 3/4	3/4
W3342	Cabinet	18	42	12
	Door	16 1/4	41 3/4	3/4
W3630	Cabinet	36	30	12
	Door	17 3/4	29 3/4	3/4
W3636	Cabinet	36	36	12
	Door	17 3/4	35 3/4	3/4
W3642	Cabinet	36	42	12
	Door	17 3/4	41 3/4	3/4
W3930	Cabinet	39	30	12
	Door	19 3/8	29 3/4	3/4

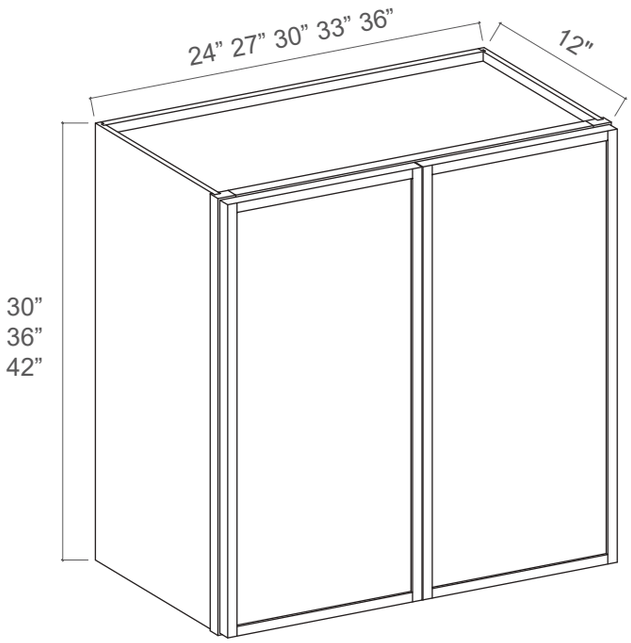

2 Adjustable Shelves (30″ & 36″)
3 Adjustable Shelves (42″)

Wall Refrigerator Cabinet Double Doors

Item Code		W	H	D
W301224	Cabinet	30	12	24
	Door	14 3/4	11 3/4	3/4
W301524	Cabinet	30	15	24
	Door	14 3/4	14 3/4	3/4
W301824	Cabinet	30	18	24
	Door	14 3/4	17 3/4	3/4
W302424	Cabinet	30	24	24
	Door	14 3/4	23 3/4	3/4
W331224	Cabinet	33	12	24
	Door	16 1/4	11 3/4	3/4
W331524	Cabinet	33	15	24
	Door	16 1/4	14 3/4	3/4
W331824	Cabinet	33	18	24
	Door	16 1/4	17 3/4	3/4
W332424	Cabinet	33	24	24
	Door	16 1/4	23 3/4	3/4
W361224	Cabinet	36	12	24
	Door	17 3/4	11 3/4	3/4
W361524	Cabinet	36	15	24
	Door	17 3/4	14 3/4	3/4
W361824	Cabinet	36	18	24
	Door	17 3/4	17 3/4	3/4
W362424	Cabinet	36	24	24
	Door	17 3/4	23 3/4	3/4

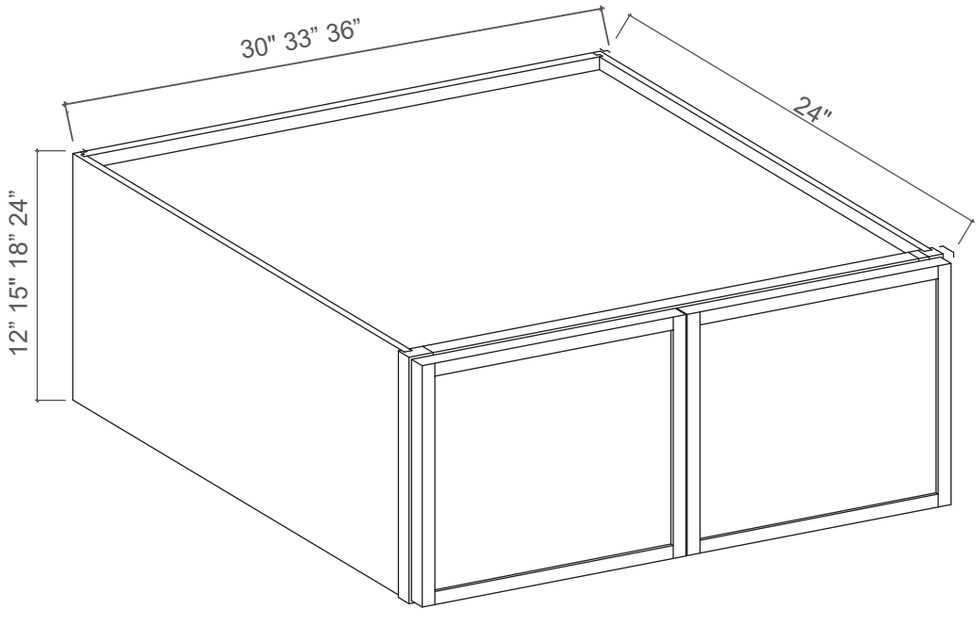

No Shelves (12", 15", 18")
1 Adjustable Shelf (24")

Wall Cabinet With Drawers

Item Code		W	H	D
WD1848	Cabinet	18	48	12
	Door	17 3/4	29 3/4	3/4
	Drawer	17 3/4	8 3/4	3/4
WD1854	Cabinet	18	54	12
	Door	17 3/4	35 3/4	3/4
	Drawer	17 3/4	8 3/4	3/4
WD1860	Cabinet	18	60	12
	Door	17 3/4	41 3/4	3/4
	Drawer	17 3/4	8 3/4	3/4

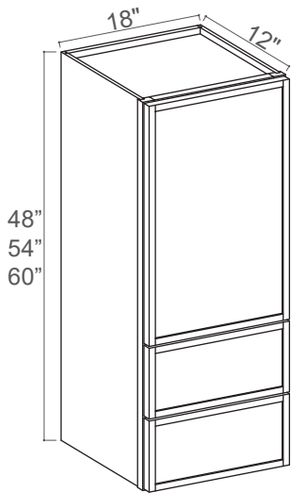

2 adjustable shelves (48" & 54")
3 adjustable shelves (60")

Wall Diagonal Corner Cabinet

Item Code		W	H	D
DCW2430	Cabinet	24	30	24
	Door	15 1/4	29 3/4	3/4
DCW2436	Cabinet	24	36	24
	Door	15 1/4	35 3/4	3/4
DCW2442	Cabinet	24	42	24
	Door	15 1/4	41 3/4	3/4

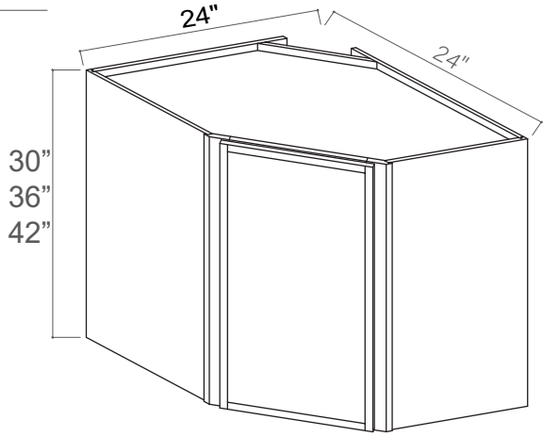

2 adjustable shelves (30"-36")
3 adjustable shelves (42")

Easy Reach Wall Cabinet

Item Code		W	H	D
WER2430	Cabinet	24	30	24
	Door	10 5/8	29 3/4	3/4
WER2436	Cabinet	24	36	24
	Door	10 5/8	35 3/4	3/4
WER2442	Cabinet	24	42	24
	Door	10 5/8	41 3/4	3/4

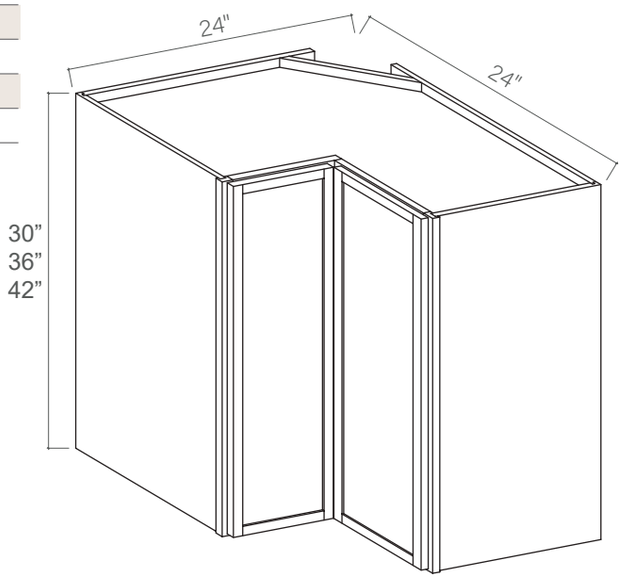

2 adjustable shelves (30" & 36")
3 adjustable shelves (42")

Wall Blind Corner Cabinet

Item Code		W	H	D
WBC2730	Cabinet	27	30	12
	Door	12 9/16	29 3/4	3/4
WBC2736	Cabinet	27	36	12
	Door	12 9/16	35 3/4	3/4
WBC2742	Cabinet	27	42	12
	Door	12 9/16	41 3/4	3/4

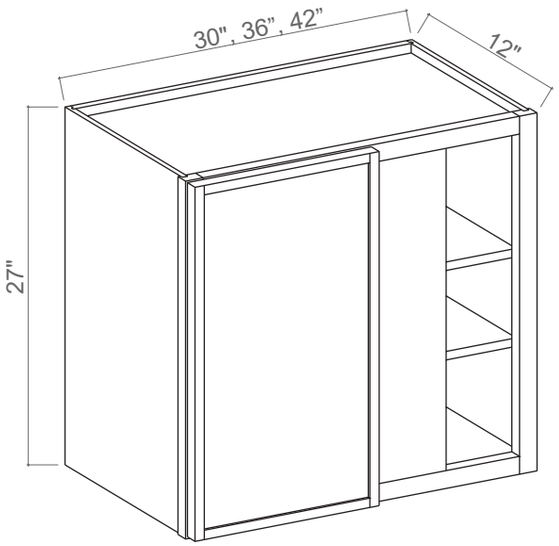

2 adjustable shelves (30"- 36")
3 adjustable shelves (42")
Can be pulled for exact fit

EDITION 2025

Base Cabinets Diagram

Explore all our SKUs and sizes to find the perfect fit for your needs.



Base Cabinet Single Door

Item Code		W	H	D
B12	Cabinet	12	34 1/2	24
	Door	11 3/4	22 7/8	3/4
B15	Cabinet	15	34 1/2	24
	Door	14 3/4	22 7/8	3/4
B18	Cabinet	18	34 1/2	24
	Door	17 3/4	22 7/8	3/4
B21	Cabinet	21	34 1/2	24
	Door	20 3/4	22 7/8	3/4

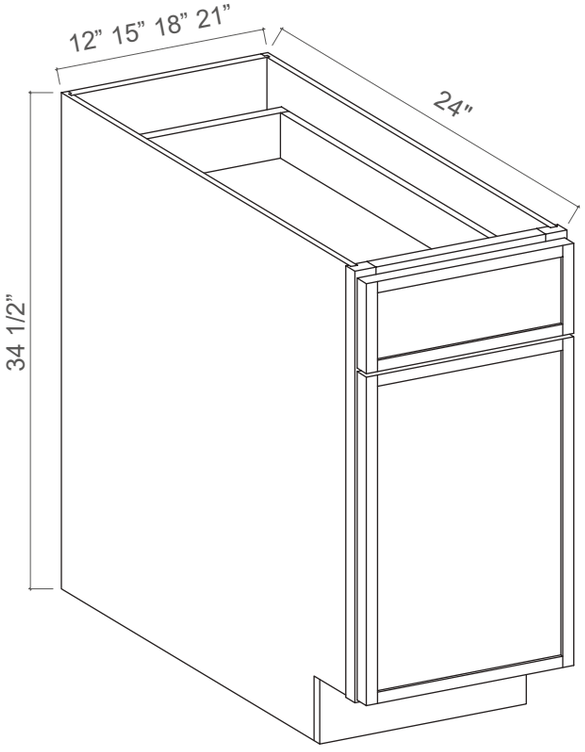

1 Drawer, 1 Adjustable Shelf (12”, 15”, 18”, 21”)

Base Cabinet Double Door

Item Code		W	H	D
B24	Cabinet	24	34 1/2	24
	Door	11 3/4	33 1/2	3/4
B27	Cabinet	27	34 1/2	24
	Door	13 3/4	33 1/2	3/4
B30	Cabinet	30	34 1/2	24
	Door	14 3/4	33 1/2	3/4
B33	Cabinet	33	34 1/2	24
	Door	15 3/4	33 1/2	3/4
B36	Cabinet	36	34 1/2	24
	Door	17 3/4	33 1/2	3/4
B42	Cabinet	42	34 1/2	24
	Door	20 3/4	33 1/2	3/4

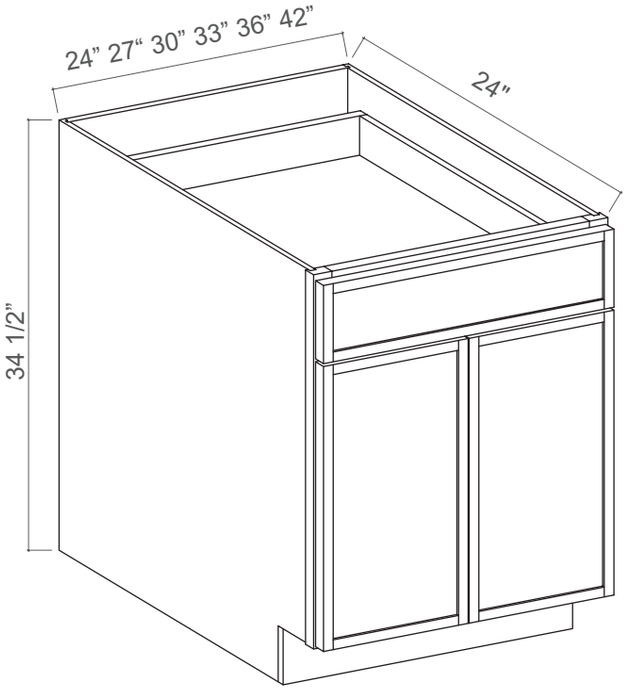

1 Drawer, 1 Adjustable Shelf (24“, 27”)
2 Drawers, 2 Adjustable Shelves (30”, 33”, 36”, 42”)

Base Cabinet Full High Single Door

Item Code		W	H	D
BT09	Cabinet	9	34 1/2	24
	Door	8 3/4	29 1/4	3/4
BFH12	Cabinet	12	34 1/2	24
	Door	11 3/4	29 1/4	3/4
BFH15	Cabinet	15	34 1/2	24
	Door	14 3/4	29 1/4	3/4
BFH18	Cabinet	18	34 1/2	24
	Door	17 3/4	29 1/4	3/4
BFH21	Cabinet	21	34 1/2	24
	Door	20 3/4	29 1/4	3/4

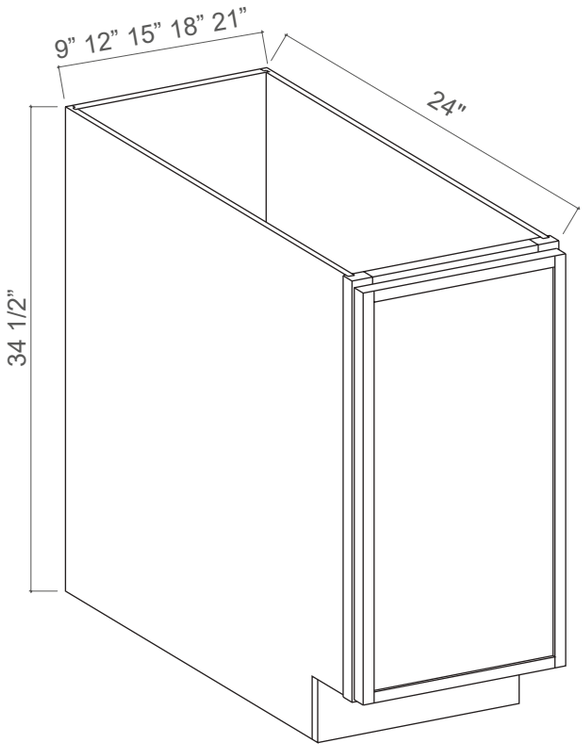

1 Adjustable Shelf (12”, 15”, 18”, 21”)

Base Cabinet Full High 2 Doors

Item Code		W	H	D
BFH24	Cabinet	24	34 1/2	24
	Door	11 3/4	29 1/4	3/4
BFH27	Cabinet	27	34 1/2	24
	Door	13 1/4	29 1/4	3/4
BFH30	Cabinet	30	34 1/2	24
	Door	14 3/4	29 1/4	3/4
BFH33	Cabinet	33	34 1/2	24
	Door	16 1/4	29 1/4	3/4
BFH36	Cabinet	36	34 1/2	24
	Door	17 3/4	29 1/4	3/4

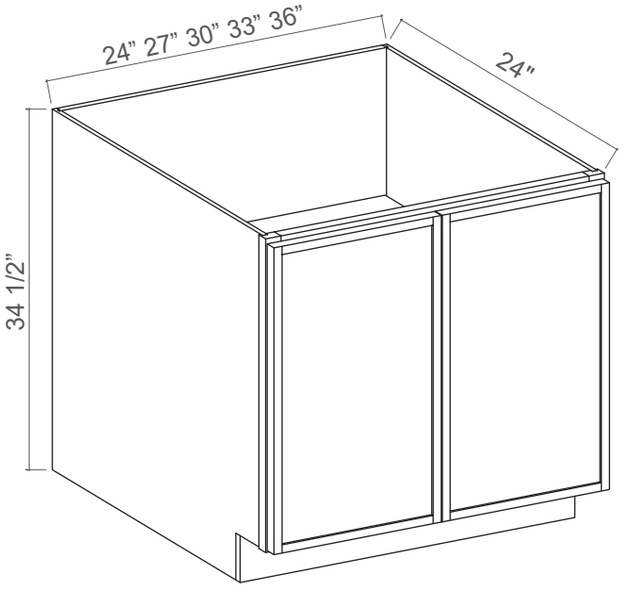

1 Adjustable Shelf

Base Cabinet 2 Drawers

Item Code		W	H	D
2DB24	Cabinet	24	34 1/2	24
	Top Drawer	23 3/4	14 1/2	3/4
	Bottom Drawer	23 3/4	14 1/2	3/4
2DB30	Cabinet	30	34 1/2	24
	Top Drawer	29 1/2	14 1/2	3/4
	Bottom Drawer	29 1/2	14 1/2	3/4
2DB36	Cabinet	36	34 1/2	24
	Top Drawer	35 1/2	14 1/2	3/4
	Bottom Drawer	35 1/2	14 1/2	3/4

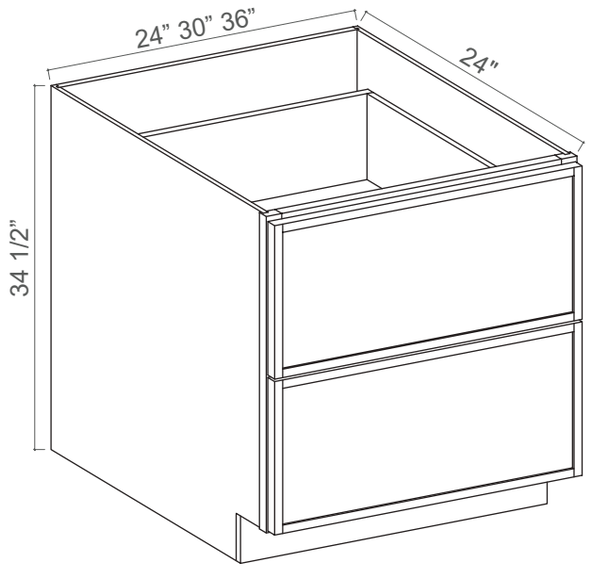

Base Cabinet 3 Drawers

Item Code		W	H	D
3DB12	Cabinet	12	34 1/2	24
	Top Drawer	11 3/4	6 1/4	3/4
	Bottom Drawer	11 3/4	11 1/4	3/4
3DB15	Cabinet	15	34 1/2	24
	Top Drawer	14 3/4	6 1/4	3/4
	Bottom Drawer	14 3/4	11 1/4	3/4
3DB18	Cabinet	18	34 1/2	24
	Top Drawer	17 3/4	6 1/4	3/4
	Bottom Drawer	17 3/4	11 1/4	3/4
3DB21	Cabinet	21	34 1/2	24
	Top Drawer	20 3/4	6 1/4	3/4
	Bottom Drawer	20 3/4	11 1/4	3/4
3DB24	Cabinet	24	34 1/2	24
	Top Drawer	23 3/4	6 1/4	3/4
	Bottom Drawer	23 3/4	11 1/4	3/4
3DB27	Cabinet	27	34 1/2	24
	Top Drawer	26 3/4	6 1/4	3/4
	Bottom Drawer	26 3/4	11 1/4	3/4
3DB30	Cabinet	30	34 1/2	24
	Top Drawer	29 3/4	6 1/4	3/4
	Bottom Drawer	29 3/4	11 1/4	3/4
3DB33	Cabinet	33	34 1/2	24
	Top Drawer	32 3/4	6 1/4	3/4
	Bottom Drawer	32 3/4	11 1/4	3/4
3DB36	Cabinet	36	34 1/2	24
	Top Drawer	35 3/4	6 1/4	3/4
	Bottom Drawer	35 3/4	11 1/4	3/4

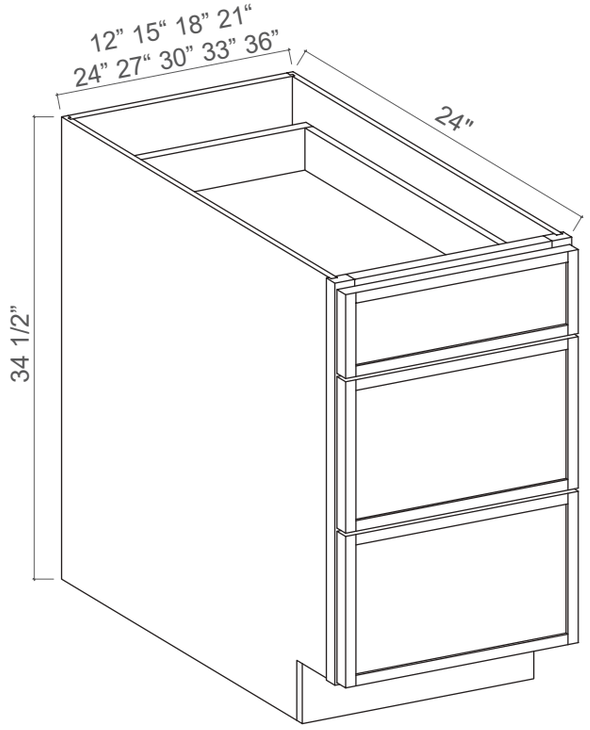

Easy Reach Base Cabinet

Item Code		W	H	D
ERB33	Cabinet	33	34 1/2	24
	Door	7 5/8	29	3/4
ERB36	Cabinet	36	34 1/2	24
	Door	10 5/8	29	3/4

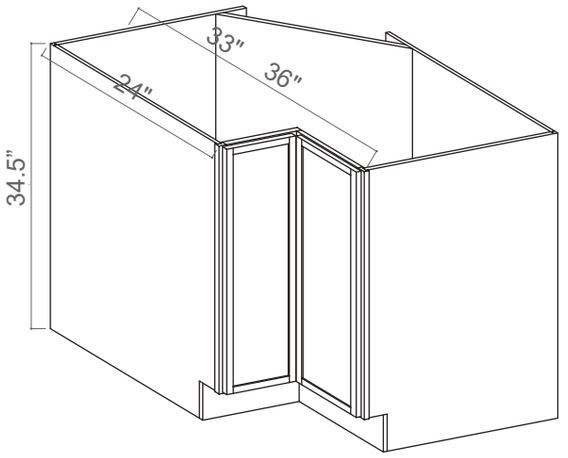

One Bi-fold Door

Blind Corner Base Cabinet

Item Code		W	H	D
BBC36*	Cabinet	33	34 1/2	24
	Door	10	22 1/2	3/4
	Drawer	10	6 1/4	3/4
	**Install range 37" min., 40" max; Specifiy Left-hinge or Right-hinge assembly*			
BBC39*	Cabinet	36	34 1/2	3/4
	Door	12 3/4	22 1/2	3/4
	Drawer	12 3/4	6 1/4	24
	**Install range 40" min., 43" max; Specifiy Left-hinge or Right-hinge assembly*			
BBC42*	BCabinet	39	34 1/2	3/4
	Door	15 3/4	22 1/2	24
	Drawer	15 3/4	6 1/4	3/4
	**Install range 43" min., 46" max: Specify Left-hinge or Right-hinge assembly*			

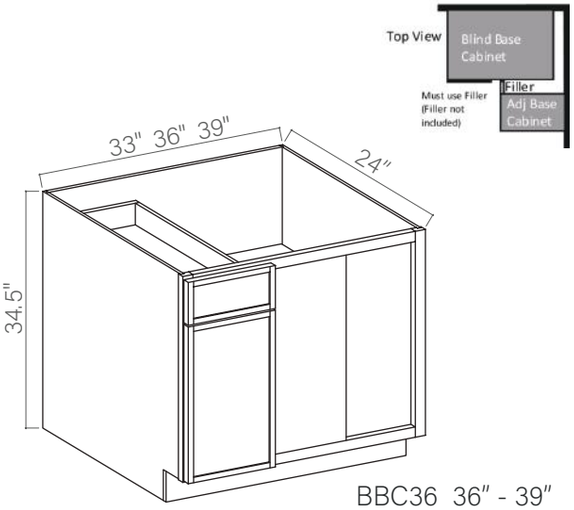

BBC36 36" - 39"
BBC39 39" - 42"
BBC42 42" - 45"

Wood Tray / Chrome Tray

Item Code
Wood Tray
Chrome Tray 33
Chrome Tray 36

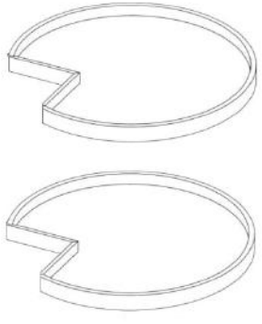

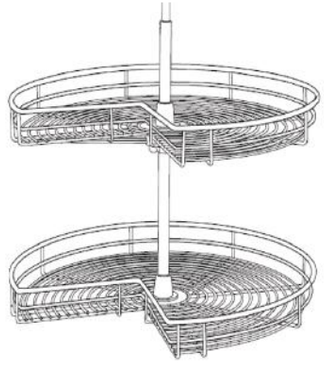

Add to ERB for Lazy Susan
The wood tray does not include a center pole.
It fits both 33" and 36"
and it's shelf-mounted.

Spice Pull Base Cabinet

Item Code		W	H	D
SPB6	Cabinet	6	34 1/2	24
	Drawer	5 1/2	29	3/4
SPB9	Cabinet	9	34 1/2	24
	Drawer	8 1/2	29	3/4

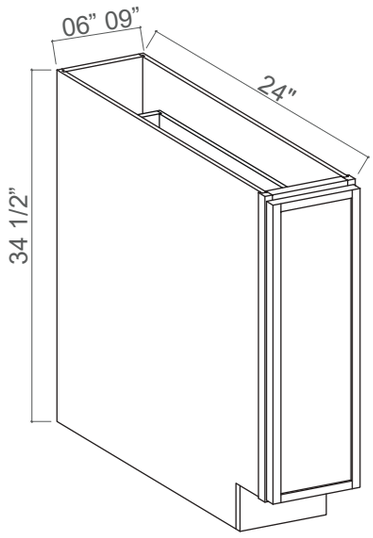

Base Waste Basket Cabinet

Item Code		W	H	D
BWB18	Cabinet	18	34 1/2	24
	Top Drawer	17 1/2	6 1/4	3/4
	Bottom Drawer	17 1/2	22 1/2	3/4

Trash bin is not included, but it can be ordered separately.

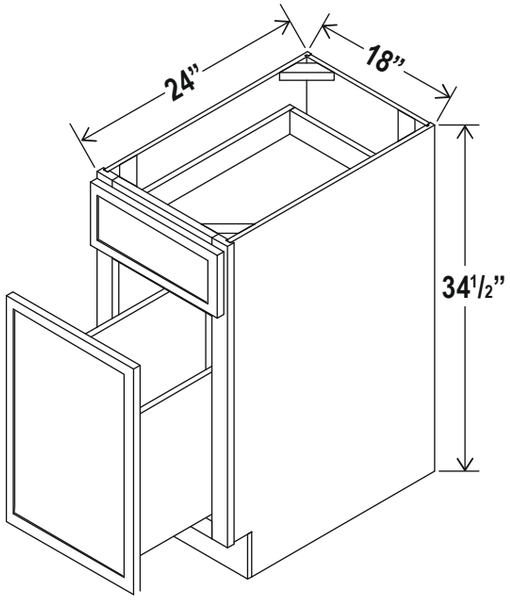

Microwave Base Cabinet

Item Code		W	H	D
MB30	Cabinet	30	34 1/2	24
	Drawer	29 3/4	10 1/2	3/4
	Opening Dimensions: 27″W x 17″H			
MB33	Cabinet	33	34 1/2	24
	Drawer	32 3/4	10 1/2	3/4
	Opening Dimensions: 30″W x 17″H			

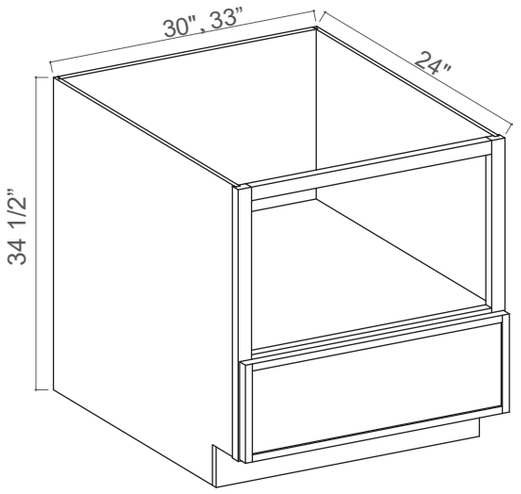

Natural Interior for SAG and Finished Interiors for SDW and SWO

Sink Base

Item Code		W	H	D
SB30	Cabinet	30	34 1/2	24
	Door	14 3/4	22 3/4	3/4
	Drawer	14 3/4	6 1/4	3/4
SB33	Cabinet	33	34 1/2	24
	Door	16 1/4	22 3/4	3/4
	Drawer	16 1/4	6 1/4	3/4
SB36	Cabinet	36	34 1/2	24
	Door	17 3/4	22 3/4	3/4
	Drawer	17 3/4	6 1/4	3/4

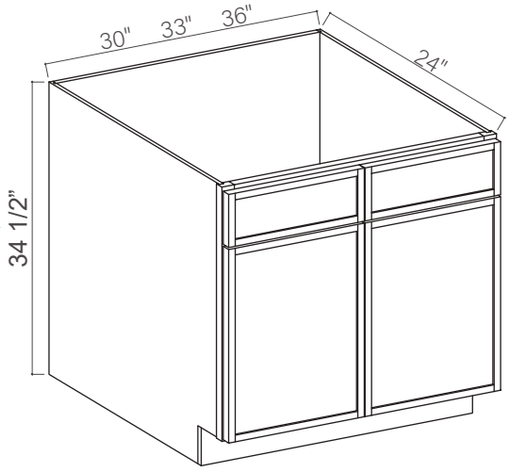

Two Dummy Drawers

Farm Sink Base

Item Code		W	H	D
FSB36	Cabinet	36	34 1/2	24
	Door	17 3/4	17 1/4	3/4
	Sink trimout: 30″ W x 7 1/2″- 9″ H			

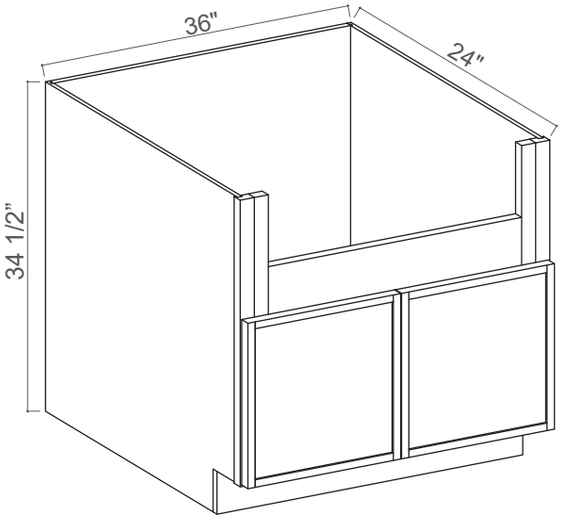

EDITION
2025

Tall Cabinets Diagram

Explore all our SKUs and sizes to find the perfect fit for your needs.



Tall Pantry 2 Doors

Item Code		W	H	D
U188424	Cabinet	18	84	24
	Top Door	17 3/4	29 3/4	3/4
	Bottom Door	17 3/4	49 1/4	3/4
U189024	Cabinet	18	90	24
	Top Door	17 3/4	35 3/4	3/4
	Bottom Door	17 3/4	49 1/4	3/4
U189624	Cabinet	18	96	24
	Top Door	17 3/4	41 3/4	3/4
	Bottom Door	17 3/4	49 1/4	3/4

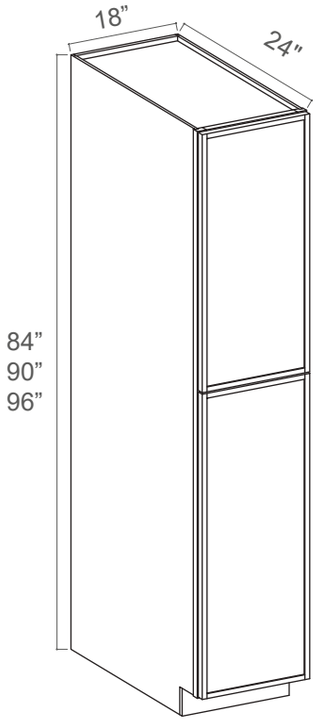

Two Doors
Two Adjustable Top Shelves
Three Bottom Shelves
Note: Roll Out Shelf Kits Available

Tall Pantry 4 Doors

Item Code		W	H	D
U248424	Cabinet	24	84	24
	Top Door	11 3/4	29 3/4	3/4
	Bottom Door	11 3/4	49 1/4	3/4
U308424	Cabinet	30	84	24
	Top Door	14 3/4	29 3/4	3/4
	Bottom Door	14 3/4	49 1/4	3/4
U249024	Cabinet	24	90	24
	Top Door	11 3/4	35 3/4	3/4
	Bottom Door	11 3/4	49 1/4	3/4
U309024	Cabinet	30	90	24
	Top Door	14 3/4	35 3/4	3/4
	Bottom Door	14 3/4	49 1/4	3/4
U249624	Cabinet	24	96	24
	Top Door	11 3/4	41 3/4	3/4
	Bottom Door	11 3/4	49 1/4	3/4
U309624	Cabinet	30	96	24
	Top Door	29 3/4	41 3/4	3/4
	Bottom Door	14 3/4	49 1/4	3/4

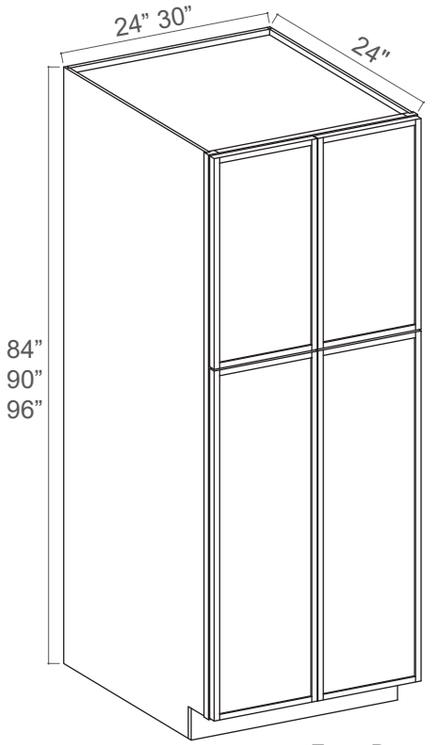

Four Doors
Two Adjustable Top Shelves
Three Bottom Shelves
Note: Roll Out Shelf Kits Available

Oven Cabinet

Item Code		W	H	D
O338424	Cabinet	33	84	24
	Doors	16 1/4	17 1/4	3/4
	Drawers	32 3/4	8 1/4	3/4
O339024	Cabinet	33	90	24
	Doors	16 1/4	23 1/4	3/4
	Drawers	32 3/4	8 1/4	3/4
O339624	Cabinet	33	96	24
	Doors	16 1/4	29 1/4	3/4
	Drawers	32 3/4	8 1/4	3/4

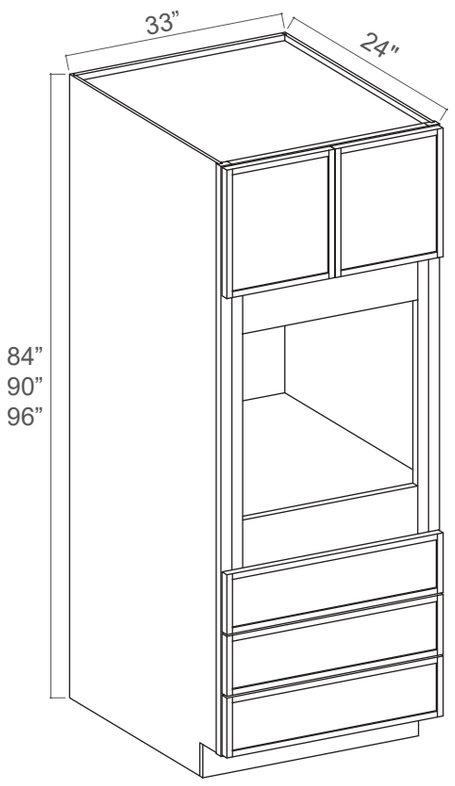

EDITION
2025

Vanity Cabinets Diagram

Explore all our SKUs and sizes to find the perfect fit for your needs.

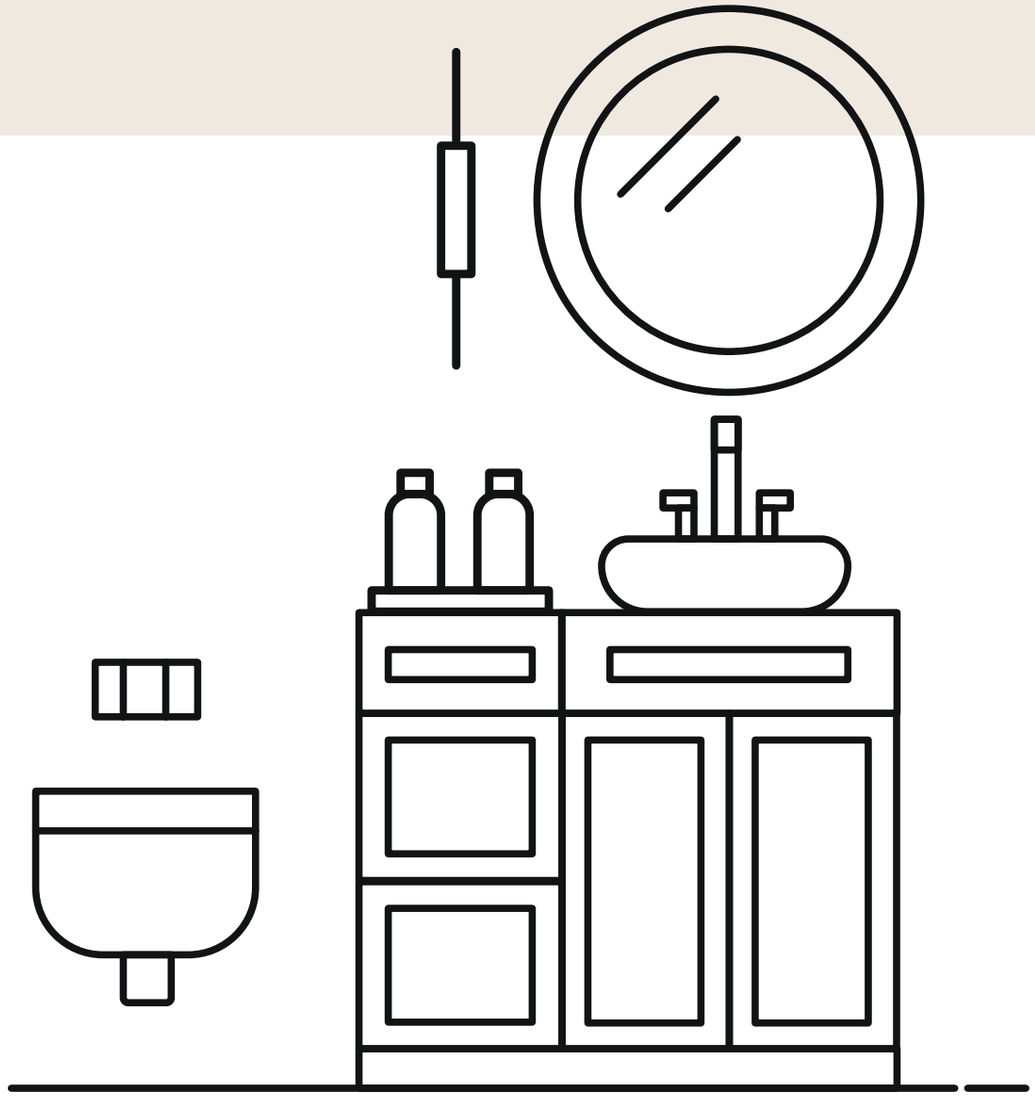

Vanity Sink Cabinet

Item Code		W	H	D
VS24	Cabinet	24	34 1/2	21
	Doors	11 3/4	22 3/4	3/4
	Dummy Drawer	23 1/4	6 1/4	3/4
VS27	Cabinet	27	34 1/2	21
	Doors	13 1/4	22 3/4	3/4
	Dummy Drawer	26 1/2	6 1/4	3/4
VS30	Cabinet	30	34 1/2	21
	Doors	14 3/4	22 3/4	3/4
	Dummy Drawers	14 3/4	6 1/4	3/4
VS33	Cabinet	33	34 1/2	21
	Doors	16 1/4	22 1/2	3/4
	Dummy Drawers	16 1/4	6 1/4	3/4
VS36	Cabinet	36	34 1/2	21
	Doors	17 3/4	22 3/4	3/4
	Dummy Drawers	17 3/4	6 1/4	3/4

NEW

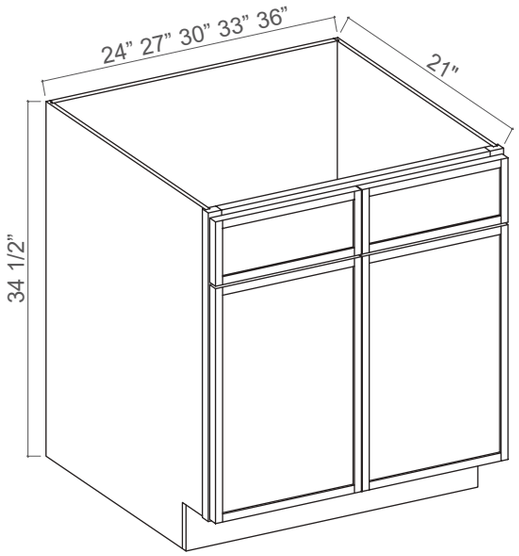

One Dummy Drawer (24”, 27”)
Two Dummy Drawers (30”, 36”)
Two Doors

Vanity Drawer Cabinet

Item Code		W	H	D
3VDB12	Cabinet	12	34 1/2	21
	Top Drawer	11 3/4	6 1/4	3/4
	Bottom Drawers	11 3/4	11 1/4	3/4
3VDB15	Cabinet	15	34 1/2	21
	Top Drawer	14 3/4	6 1/4	3/4
	Bottom Drawers	14 3/4	11 1/4	3/4
3VDB18	Cabinet	18	34 1/2	21
	Top Drawer	17 3/4	6 1/4	3/4
	Bottom Drawers	17 3/4	11 1/4	3/4
3VDB21	Cabinet	21	34 1/2	21
	Top Drawer	20 3/4	6 1/4	3/4
	Bottom Drawers	20 3/4	11 1/4	3/4
3VDB24	Cabinet	24	34 1/2	21
	Top Drawer	23 3/4	6 1/4	3/4
	Bottom Drawers	23 3/4	11 1/4	3/4

NEW

NEW

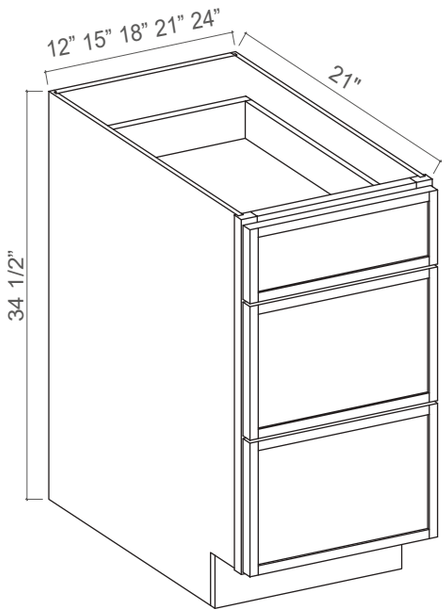

Three Drawers

Vanity Combo Cabinet

Item Code		W	H	D
V3021TDL	Cabinet	30	34 1/2	21
	Door	17 3/4	22 3/4	3/4
	Long Top Drawer	29 3/4	6 1/4	3/4
	Middle Drawer	11 3/4	11 1/4	3/4
	Bottom Drawer	11 3/4	11 1/4	3/4
V3021TDR	Cabinet	30	34 1/2	21
	Door	17 3/4	22 3/4	3/4
	Long Top Drawer	29 3/4	6 1/4	3/4
	Middle Drawer	11 3/4	11 1/4	3/4
	Bottom Drawer	11 3/4	11 1/4	3/4

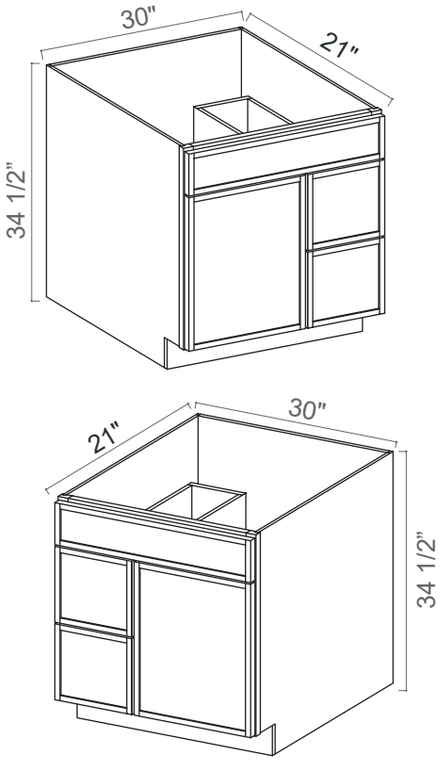

V3021TDL: 30" Combo w Drawers Left
V3021TDR: 30" Combo w Drawers Right

Vanity Drawer Cabinet

Item Code		W	H	D	
V3321TDL	Cabinet	33	34 1/2	21	
	Door	20 3/4	22 3/4	3/4	
	Long Top Drawer	32 3/4	6 1/4	3/4	NEW
	Middle Drawer	11 3/4	11 1/4	3/4	
	Bottom Drawer	11 3/4	11 1/4	3/4	
V3321TDR	Cabinet	33	34 1/2	21	
	Door	20 3/4	22 3/4	3/4	
	Long Top Drawer	32 3/4	6 1/4	3/4	NEW
	Middle Drawer	11 3/4	11 1/4	3/4	
	Bottom Drawer	11 3/4	11 1/4	3/4	

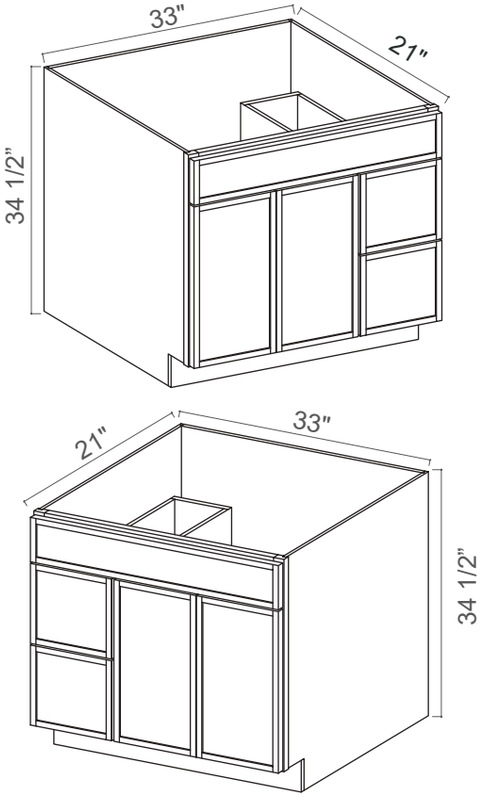

V3321TDL: 33" Combo w Drawers Left
V3321TDR: 33" Combo w Drawers Right

Vanity Drawer Cabinet

Item Code		W	H	D
V3621TDL	Cabinet	36	34 1/2	21
	Door	11 3/4	22 3/4	3/4
	Long Top Drawer	35 3/4	6 1/4	3/4
	Middle Drawer	11 3/4	11 1/4	3/4
	Bottom Drawer	11 3/4	11 1/4	3/4
V3621TDR	Cabinet	36	34 1/2	21
	Door	11 3/4	22 3/4	3/4
	Long Top Drawer	35 3/4	6 1/4	3/4
	Middle Drawer	11 3/4	11 1/4	3/4
	Bottom Drawer	11 3/4	11 1/4	3/4

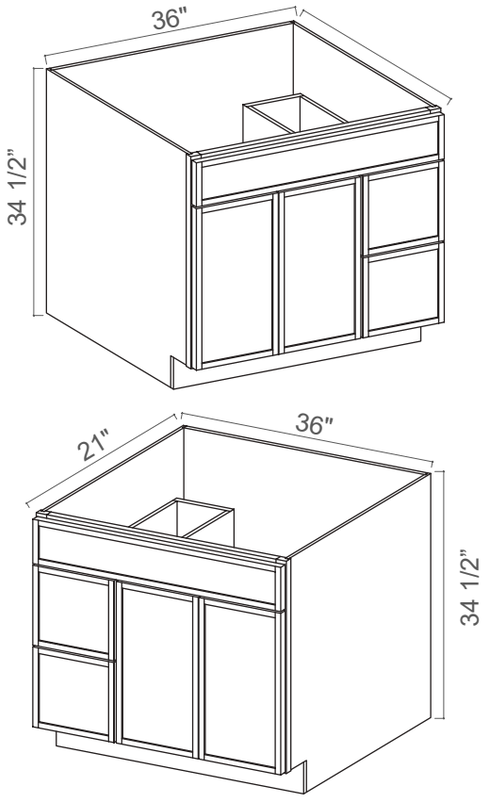

V3621TDL: 36" Combo w Drawers Left
V3621TDR: 36" Combo w Drawers Right

Vanity Sink Drawer Base Cabinet

Item Code		W	H	D
VSD36	Cabinet	36	34 1/2	21
	Doors	17 3/4	22 1/2	3/4
	Outside Drawers	10 1/4	6 1/4	3/4
	Center Drawer	14 1/2	6 1/4	3/4
VSD42	Cabinet	42	34 1/2	21
	Doors	20 3/4	22 1/2	3/4
	Outside Drawers	11 1/2	6 1/4	3/4
	Center Drawer	18	6 1/4	3/4
VSD48	Cabinet	48	34 1/2	21
	Doors	23 3/4	22 1/2	3/4
	Outside Drawers	14 1/2	6 1/4	3/4
	Center Drawer	18	6 1/4	3/4

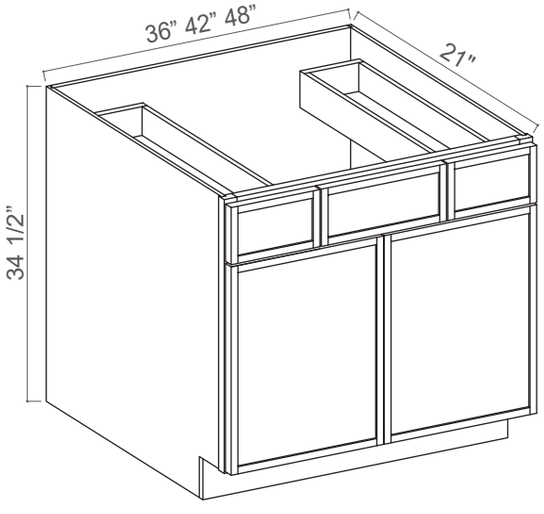

EDITION
2025

Accesories & Molding

Explore all our SKUs and sizes to find the perfect fit for your needs.

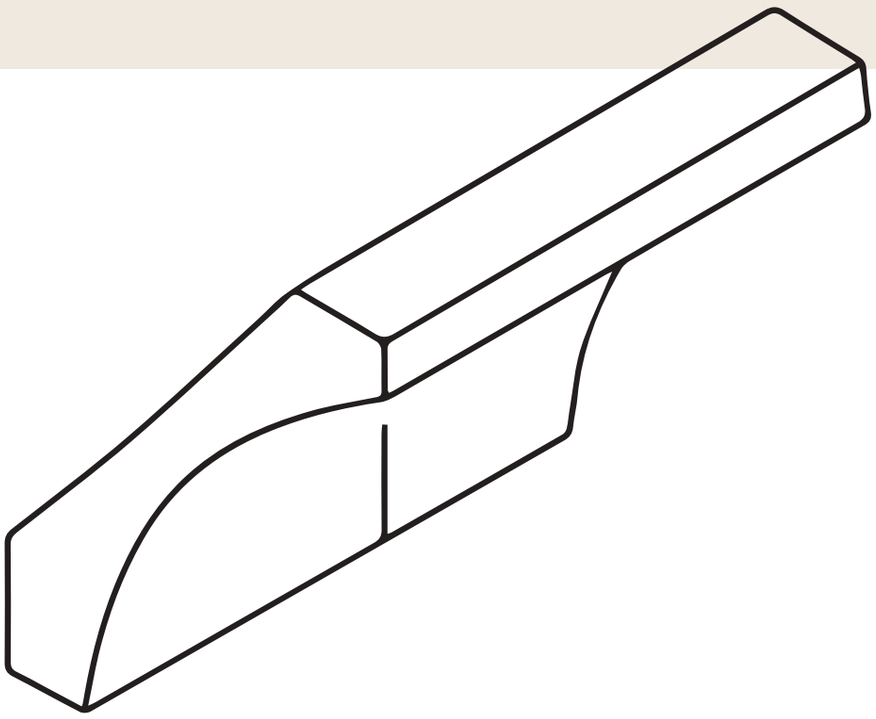

Wall / Tall Fillers

Item Code	L
F1.5	96
F342	42
F396	96
F642	42
F696	96

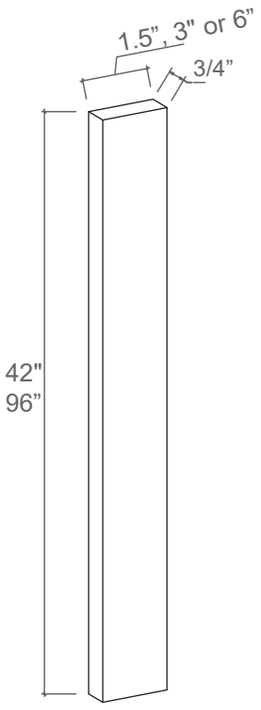

Classic Decorative Leg

Item Code
CLDL

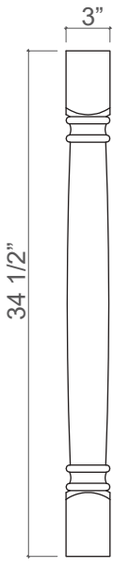

Floating Shelf

Item Code	L
FS24	24
FS30	30
FS36	36

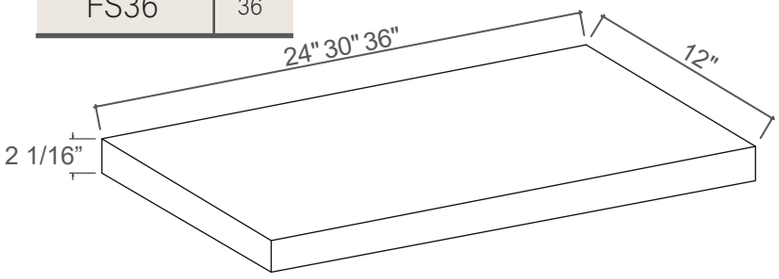

Comes with hardware

Shelf Board

Item Code	L
S2496	96

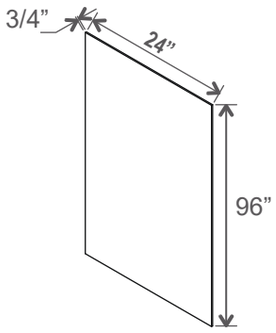

Banded on both edges
Finished on all 4 sides
Color to match cabinet

Roll Out Tray

Item Code
RS18
RS21
RS24
RS27
RS30
RS33
RS36

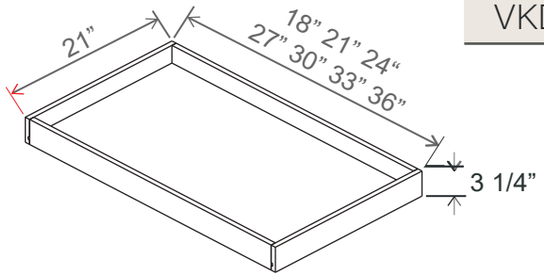

Natural finish. Side mount only.
Full extension, not self-closing

Knee Drawer

Item Code
VKD36

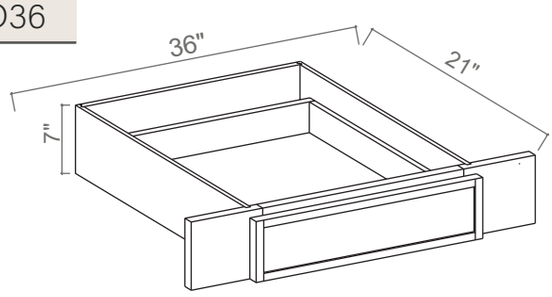

Note : Max trim to 30"
Note: Interior Drawer Dimensions 3 1/2" x 18 1/4" x 20 1/4"

Toe Kick

Item Code	L
TKC	96

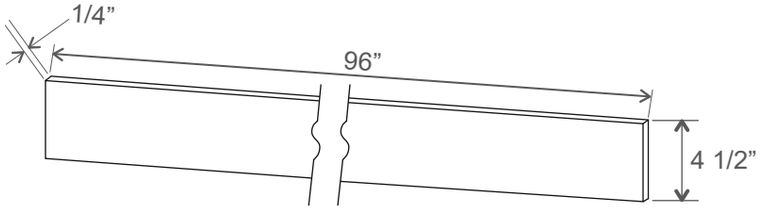

Dishwasher Return Panel

Item Code	L
DWR3	34 1/2

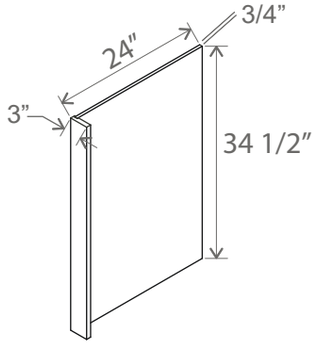

Scribe Moulding

Item Code	L
SM8(SCR)	96

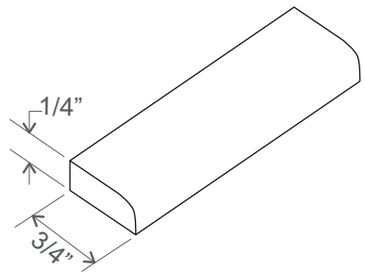

Batten Moulding

Item Code	L
BAM	96

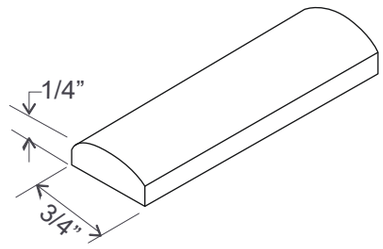

Furniture Base Moulding

Item Code	L
FBM	96

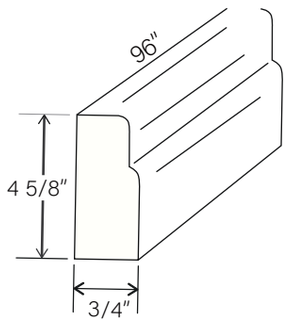

Crown Moulding

Item Code	L
CM2	96
CM4	96

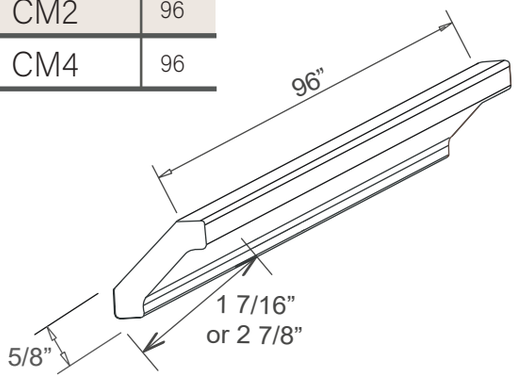

Outside Corner Moulding

Item Code	L
OCM8	96

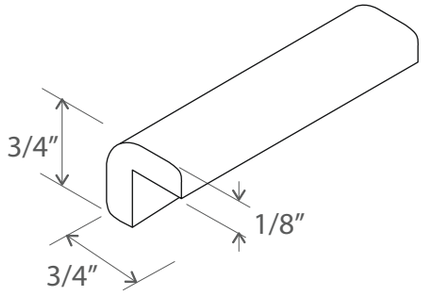

Shoe Moulding

Item Code	L
SHM	96

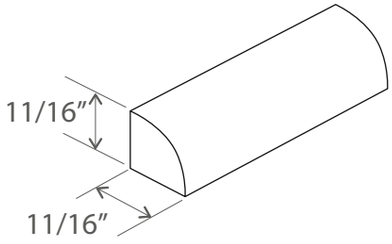

Tall Skin Veneer Panel

Item Code	L
USV2496	96

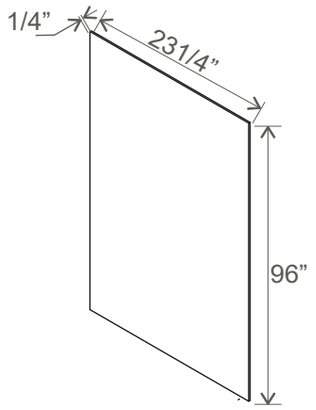

Note: Edges are not finished

Tall Skin Veneer Panel

NEW

Item Code	L
USV2496	96

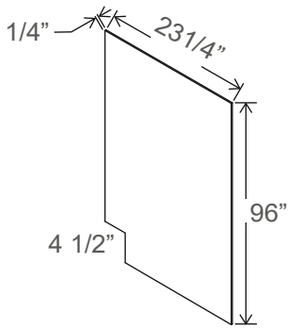

Only Available in - SAG

Note: Edges are not finished

Base Skin Veneer Panel

Item Code	L
BSV	34 1/2

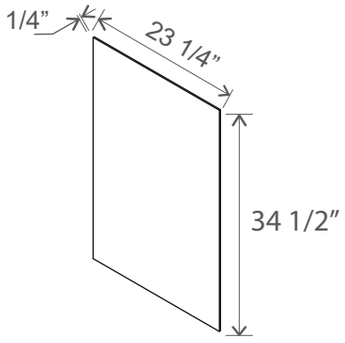

Note: Edges are not finished

Base Skin Veneer Panel

NEW

Item Code	L
BSV	34 1/2

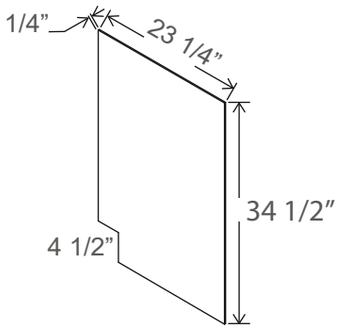

Only Available in - SAG

Note: Edges are not finished

Wall Skin Panel

Item Code	L
WSV24	24
WSV30	30
WSV36	36
WSV42	42

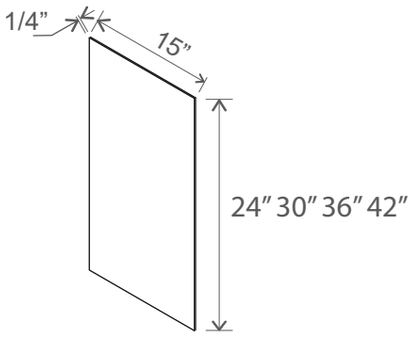

Note: Edges are not finished

Refrigerator End Panel

Item Code	L
REPV2496	96
REPV2796	96

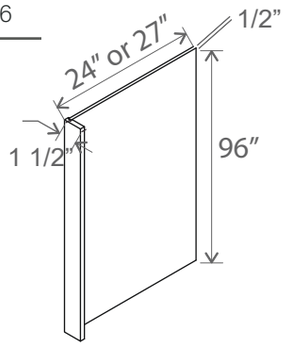

Tall Derative Door Panel

Item Code	L
TDEP2484	79
TDEP2490	85
TDEP2496	91

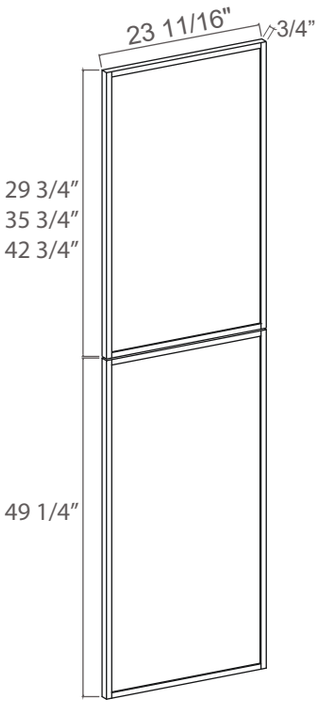

Wall Decorative Door Panel

Item Code	L
WDEP30	29 3/4
WDEP36	35 3/4
WDEP42	41 3/4

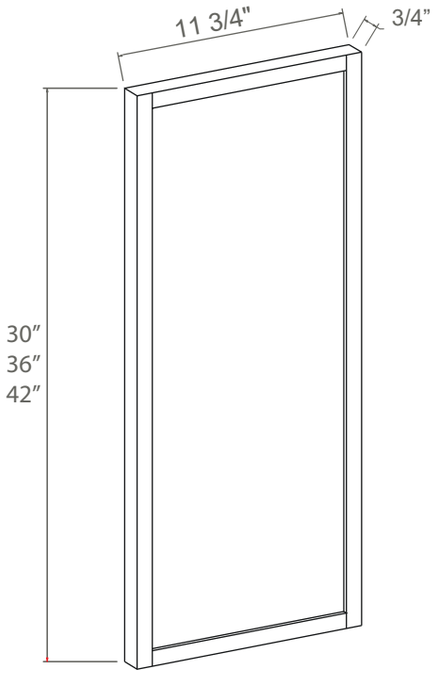

Base Decorative Door Panel

Item Code	L
BDEP	29 1/4"

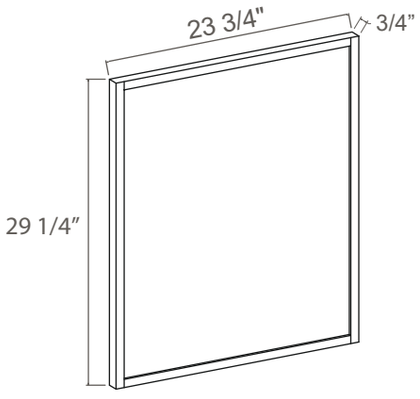

Vanity Decorative Door Panel

NEW

Item Code	L
VDEP	20 11/16"

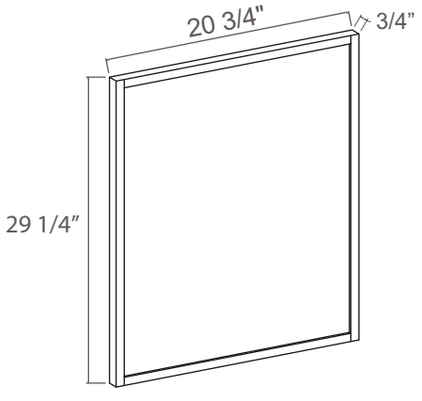

Finish Plywood Panel

Item Code	L
FPV4296	96

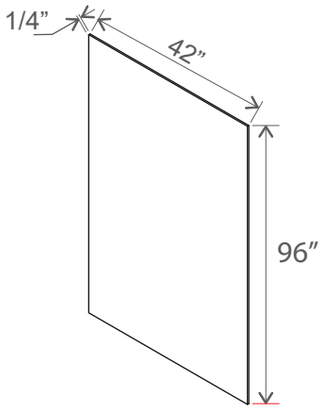

Note: Edges are not finished

Skin Panel - Interior

Item Code	W	H	D
Skin Panel - Interior	48	48	1/4

NEW

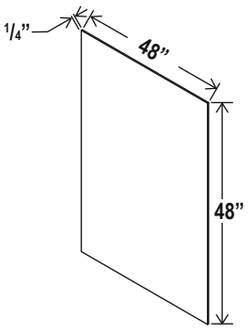

Natural color finish that matches the interior.

Shelf Board

NEW

Item Code	W
Shelf Board W	36
Shelf Board B	48

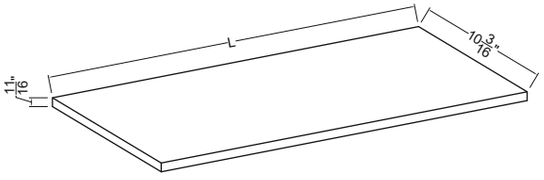

Shelf Interior W

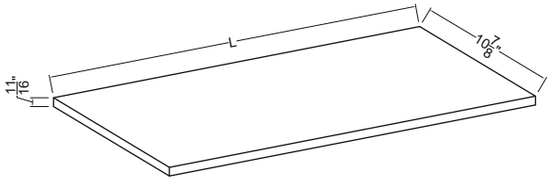

Shelf Interior B

Natural color finish that matches the interior.

NEW

Trash Bin

Item Code

Trash Bin

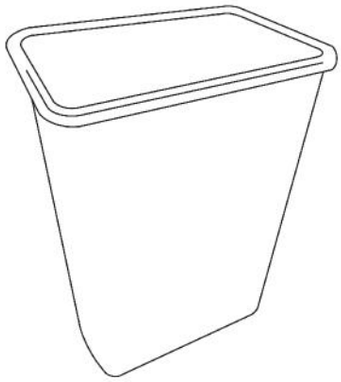

35-Quart Trash Can (8.75 Gallons)

NEW

Sample Door - Display

Item Code

Sample Door - Display

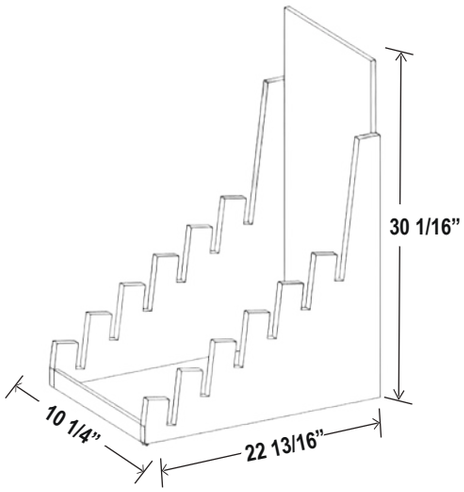

Sample Door

Item Code

SD

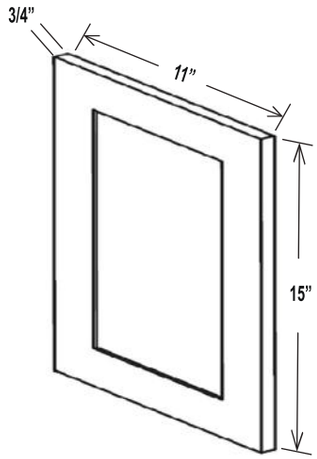

Warranty
12 months

LIMITED TIME WARRANTY

Dawson stone and cabinet warrants to the original consumer purchases that Dawson Cabinetry cabinets, door hinges, and drawer glides will be free from defects in material and workmanship under normal use and service for twelve months (Proof of Purchase is required). This warranty is not transferable and only applicable to product used for residential purposes. Representatives of Dawson Cabinetry do not have the authority to change or enlarge this warranty.

Dawson stone and cabinet at our option, may elect to repair or replace with a functionally equivalent product any product covered by this warranty. Some replacement parts are subject to availability and may **differ from original parts received. Return of defective product may be required for a replacement to be issued. Repair parts or replacement parts are at the expense of Dawson stone and cabinet but customer shall bear all other expenses. These expenses may include, but are not limited to, cost of removal and re-installation of product, labor expenses, etc.**

This warranty is valid only in the United States of America and is not transferable. All implied warranties are limited in duration to the shorter of the period provided by law or the period of this warranty. To the extent permitted by law, this warranty excludes special, incidental, or consequential damages. Some states do not allow the exclusion or limitations of incidental or consequential damages or limitations on how long an implied warranty lasts, so the above limitations or exclusions may not apply to you. This warranty gives you specific legal rights; you may have other rights which vary from state to state. To exercise this warranty, please contact the Dawson Cabinetry supplier from whom you purchased the product.